Repl. by 23A

Federal Aviation Agency

ADVISORY CIRCULAR

AC NO: AC 90-23	
AIR TRAFFIC CONTROL AND GENERAL OPERATIONS	
EFFECTIVE: 2/24/65	

SUBJECT: WAKE TURBULENCE

1. PURPOSE. This Circular provides information on the subject of wake turbulence and suggests techniques that may help pilots avoid the hazards associated with wing tip vortex turbulence.

2. REFERENCES. National Aeronautics and Space Administration (NASA) Technical Note, (TN) D-1777 of April 1963 and Federal Aviation Agency (FAA) reports RD-64-3 and RD-64-4 of January 1964. The latter two reports are commonly known as the "Douglas" and "Boeing" reports. In addition, the FAA is preparing a motion picture film entitled "Wake Turbulence" that will become available approximately July 1, 1965.

3. CANCELLATION. Flight Standards Service Release No. 460 of April 16, 1962, is cancelled.

4. BACKGROUND. For years turbulence generated by aircraft was attributed to "prop wash." Pilots, in making maneuvers such as steep 360° and 720° turns, would occasionally get caught in their own "prop wash." The "prop wash" behind other aircraft caused some pretty rough rides, "go-arounds," some accidents and was the subject of a lot of "hangar flying."

   With the advent of the large jet transport and helicopters, the dangers associated with vortex turbulence were greatly emphasized and the so-called "prop wash" problems enlarged to include "jet wash" and helicopter "down wash" turbulence. By this time, however, the problems associated with aircraft wake turbulence had been broken down into two categories--"thrust stream turbulence" and "wing tip vortices."

What was once thought to be prop wash was in fact vortex turbulence. "Prop/jet wash," i.e., thrust stream turbulence, can be a hazard to aircraft operating on the ground and pilots should take normal precautions to avoid taxiing closely behind larger aircraft making an engine runup or running up when other smaller aircraft are close behind them, as the case may be. At distances of 400-500 feet "prop" or "jet wash" normally will not constitute a serious hazard to other aircraft operating on the ground. Also, it should not be a hazard to aircraft in flight except possibly in the case of a take-off or landing in the immediate area of an aircraft making a ground runup. An example of "jet wash" velocities is shown in Figure 1. These patterns will, of course, vary in shape and velocities with different aircraft and power settings, and will change when subjected to surface winds of differing relative directions and velocities.

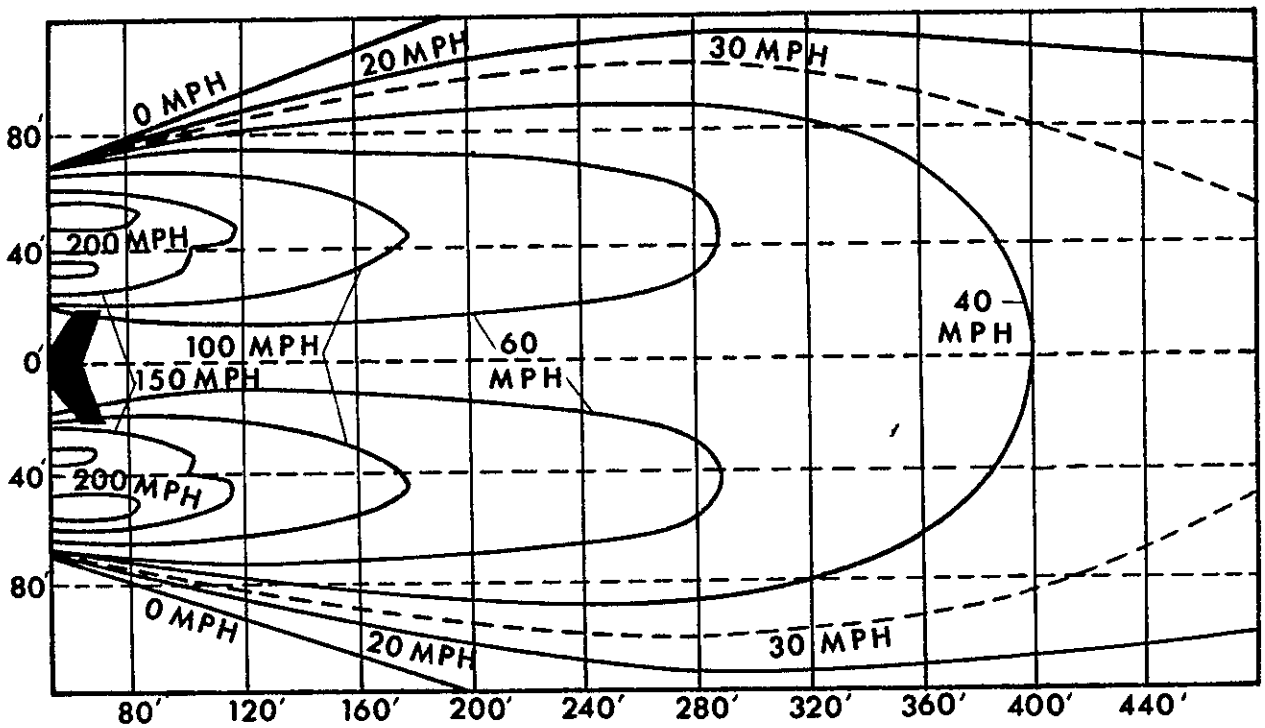

Figure 1.
Example thrust stream velocity curves of a typical large 4 engine turbojet aircraft in a no wind condition at initial taxi power.

5. VORTICES. A vortex core is the center of a trailing mass of disturbed air created by the wing of an aircraft as it produces lift. An aircraft creates two such vortices with rotational air movement. As a lift-producing air foil passes through the air it leaves a continuous sheet of unstable air behind the trailing edge. Due to spillage about the wing tips, the air rolls into two distinct vortices, one trailing behind each wing tip. The roll up process is normally complete at a distance equal to about two to four times the wing or rotor span of the aircraft - about 200 to 600 feet behind the aircraft. If visible, formation of the vortex cores would appear approximately as shown in Figure 2.

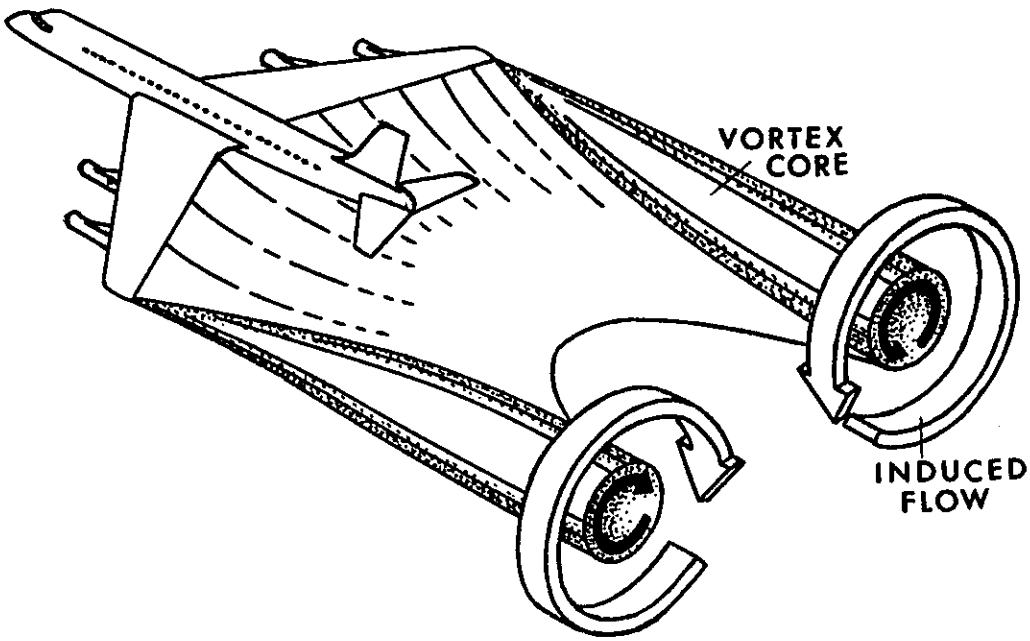

Figure 2.
Example of wing tip vortices initial formation. (Once formed, vortices extend and may be hazardous for an undetermined distance behind the generating aircraft.)

Vortices generated by the rotors of a helicopter are shed and trail along the track behind the aircraft in the same manner as those generated by a fixed wing aircraft. These vortices have the same internal air circulation as those generated by fixed wing aircraft and have the same effect upon other aircraft.

6. VORTEX INTENSITY. When an air foil passes through a mass of air and creates lift, energy proportional to the weight being lifted is transmitted to the mass of air. Generally, the greater the lift, the greater the energy transmitted to the air mass in the form of turbulence. The turbulence is directly related to the weight, wing span and speed of the aircraft. Its intensity is directly proportional to the weight and inversely proportional to the wing span and speed of the aircraft. The heavier and slower the aircraft, the greater the intensity of the air circulation in the vortex cores. Thus, it can be seen that modern large transport aircraft will create vortices having maximum rotational velocities during take-off and landing at or near maximum gross weights.

7. VORTEX PERSISTENCY. There is no current practical knowledge that can be used as a yardstick to accurately measure the period of time vortices will be a hazard to other aircraft. Studies have been conducted and measurements made of the size of vortices and velocity of the air within them up to nearly three minutes after passage of large aircraft. Pilots have reported what they believed to be vortex turbulence five minutes and more after passage of another aircraft. No practical rule involving a time interval for one aircraft behind another will assure avoidance of the vortices generated by the first. However, other methods of avoiding the hazards associated with aircraft vortices are known and can be applied by pilots.

8. VORTEX DANGERS. "Why should I avoid flying in or through the vortex turbulence behind large aircraft?" is a question that a pilot might ask if accustomed only to the turbulence created by light single and twin engine aircraft. Perhaps the best answer, and the most impressive one is that the aerodynamic forces applied upon the light aircraft by the circulation of air in the vortices and the pilot's attempt to counteract it could result in the airframe design limits being exceeded and possibly structural failure.

And then there is the pilot who has always been able to control his aircraft through any "prop wash" he has encountered. His excellent ability may mean nothing because the forces he encounters behind a heavily loaded large aircraft could exceed the control capability of his aircraft. A roll, descent, or combination of the two could continue even though full control travel or power is applied. The forces of the air in wing tip vortices can well exceed the aileron control capability or the climb rate of some aircraft. For those who want figures, the air in a vortex core can produce a roll rate of about 80 degrees per second which is about twice the roll rate capability of some light aircraft when using full aileron deflection. If the light aircraft stayed directly between the center of the vortex cores from a heavy jet transport it could encounter a downward flow of air of about 1,500 feet per minute. A light aircraft with a continued climb capability of 1,000 to 1,200 feet per minute could go only in one direction--down. Caught in such a position the pilot who altered his course could get caught by the roll forces or

a combination of downward and roll forces. These forces have been sufficient to cause aircraft to do one or more complete rolls, to force them into the ground and in some instances a combination of the two actions.

9. VORTEX LOCATION. The best way of avoiding the vortices hazards is to know where they are most likely to be encountered and act accordingly. Since vortices are not formed until lift is produced they will not be generated by an aircraft taking off until just before lift off--at the point where rotation is made. Vortices cease to be generated by a landing aircraft when its wing ceases to produce lift--when it has actually landed. However, remember that a large aircraft could have taken off and be out of sight, or landed and be on the ramp and the vortices turbulence could still be present near the runway.

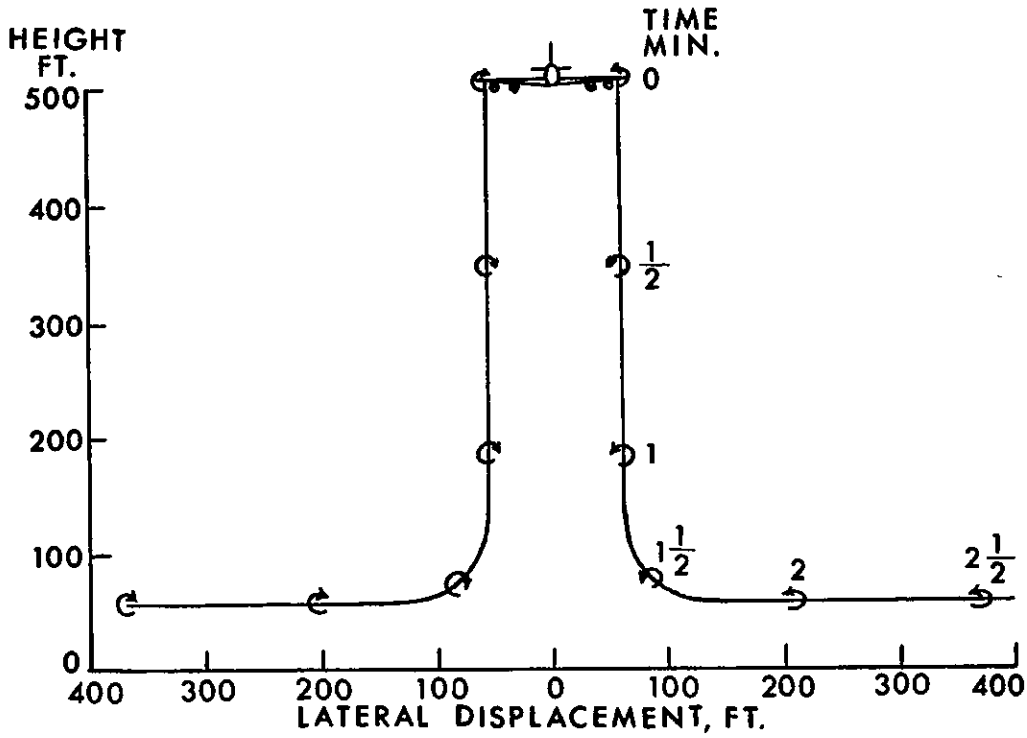

Figure 3.

Example - Vertical and lateral displacement of vortex cores due to mutual and ground interactions. Based on a heavy transport aircraft at 160 k. in calm wind.

Another factor to remember is the vertical and lateral movements of vortices. Figure 3 on the preceding page shows an example of both in a no-wind condition. Vortices generated more than 400 or 500 feet above the surface will drop nearly vertically in a no-wind condition until reaching a height equal to approximately one-half the wing span of the generating aircraft. At that point they start to curve outward and spread laterally away from the track of the aircraft. There is one other thing that must be remembered, that is--both the vertical and lateral movement of the vortex cores, will be affected by and move with the encompassing air mass. A cross wind will displace the vortices from the vertical in their downward travel and affect the lateral rate of travel. A cross wind component of approximately four to six knots, depending upon the lateral rate of vortex travel, is sufficient to cause one core to remain laterally stationary over a line on the surface while the opposite core will travel at its own lateral rate plus that of the effective cross wind.

10. SUGGESTED PILOT ACTION. Unfortunately, the best advice is not always the most practical. In the case of vortex turbulence hazards avoidance, to insure 100% success would require pilots, particularly those flying relatively smaller aircraft, to refrain from operating in areas where the very large and heavy aircraft regularly operate. It would produce the desired result but would not be practical. What can you as a pilot do?

a. General Rule. When it is necessary to operate behind a large heavy aircraft try to remain above the flight path of that aircraft. Remember that vortices settle toward the surface and also that they are affected by the wind and move with the air mass down to within one hundred or so feet from the ground before spreading laterally away from each other and that the wind will continue to affect the vortex cores until dissipation occurs. Because of the infinite number of different circumstances that can exist, it is not practical to establish a set of inflexible rules. Therefore, we have outlined several possible courses of action and included their depiction in the following Figure 4, which, depending upon existing conditions and types of aircraft, pilots may wish to consider.

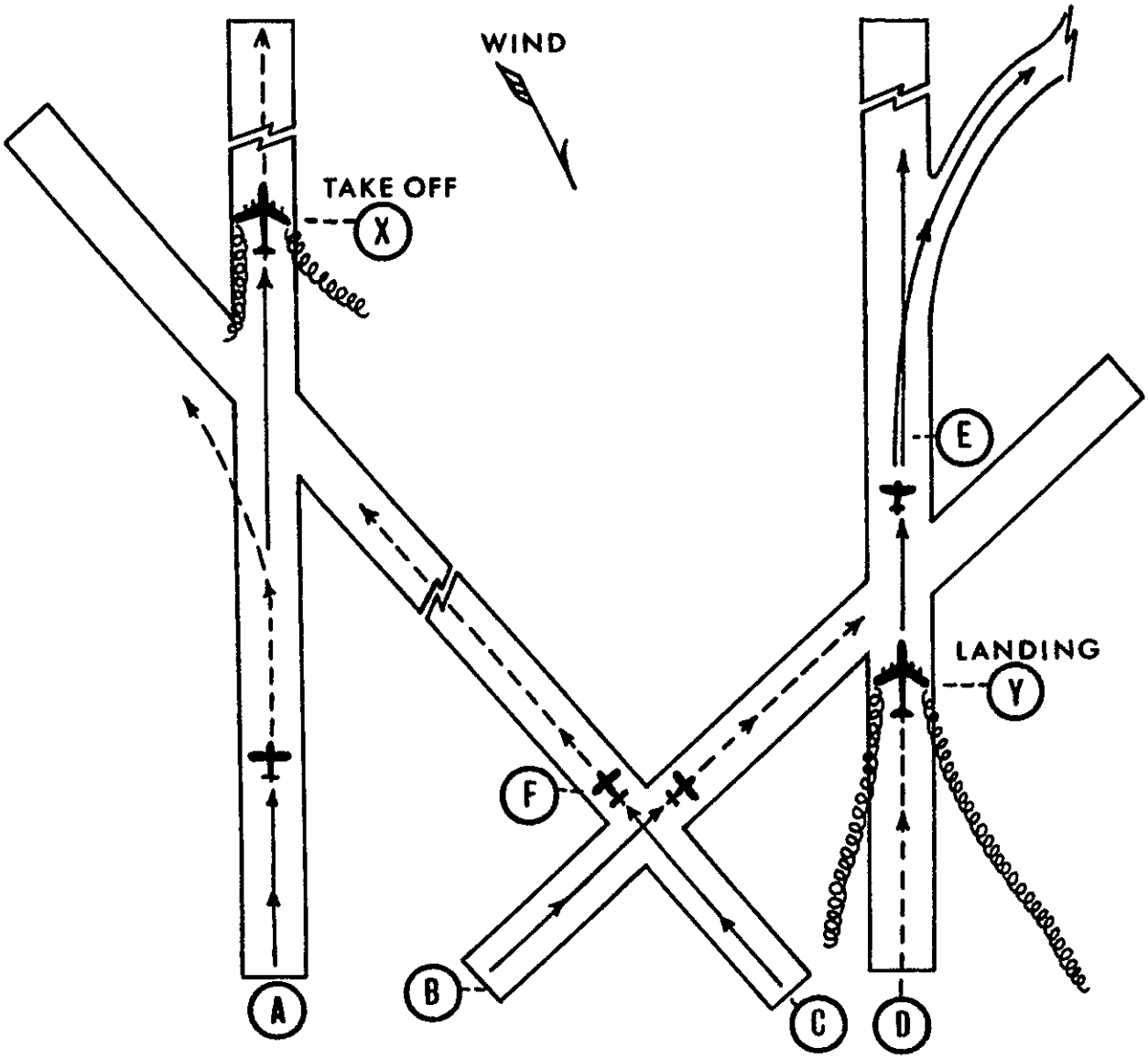

GROUND PATH
FLIGHT PATH

LARGE AIRCRAFT	SMALL AIRCRAFT TAKE-OFF*	SMALL AIRCRAFT LANDING*
TAKE-OFF at X	B,D,C,A	D,C,B,A
LAND at Y	A,C,E,B	A,B,E,F

*Take-off and landing points listed in order of probable preference with regard to turbulence from take-off and landing of large aircraft.

Figure 4.
Example Take-off/Landing
Alternative courses of action

b. Take-off/Take-off.

(1) Same or parallel runway. Start the take-off roll at the end of the runway so that your take-off will be before the point where the previous aircraft's take-off was made. Make a normal performance take-off and climb and you should be behind and above the settling vortices of the preceding aircraft. If possible, make a turn away from the runway heading and if there is any cross wind make that turn into the wind. Don't depend upon the wind to dissipate the vortex core circulation appreciably unless it is 10-15 knots or higher and even then it could take several minutes. Also, remember that the lateral movement of vortices, even in a no wind condition, may place a vortex core over a parallel runway. With a light cross wind one vortex can remain stationary over the ground for some time, or even move upwind, before dissipating to any significant degree.

(2) Intersecting runways. If the large aircraft was still on the ground until well past the intersection and your take-off will permit climb to approximately 100 feet or more before you pass the intersection you should not encounter either the vortices or any appreciable thrust stream turbulence. Remember the general rule and make certain that you cross above the flight path of larger aircraft. Also remember that the larger aircraft will probably have a high gross weight at take-off and thus will generate vortices of maximum intensity. Also, consider the lateral movement of vortices and the possible effect the wind will have upon that movement.

c. Take-off/Landing.

(1) Same or parallel runway. When taking off after another aircraft has just landed, plan to become airborne beyond the point where the other aircraft landed. Remember, while starting take-off from an intersection may keep you out of the vortices of an aircraft that has just landed, it could place you in the vortices shed by one that took off several minutes before on the same or a parallel runway.

(2) Intersecting runways. The precautions to heed when taking off after another aircraft has just landed on an intersecting runway are the same as those for a single or parallel runway. But don't forget the "heavy" that may have taken off from either your runway or the other one within the past several minutes.

d. Traffic Pattern. Don't fly below and behind a large aircraft in the traffic pattern. If practicable, plan your pattern to stay laterally separated from large aircraft by at least several hundred feet. When on the final approach, an above and behind position should keep you clear of the turbulence created by the preceding aircraft.

e. Landing/Landing. The same above and behind position on final approach will place the light aircraft pilot in a good position to touch down beyond the point where a preceding large aircraft landed, length of runway considered. If the runway has a visual approach slope indicator (VASI) system, a flight path in the "red and white" or with the top bar appearing a bit pink will keep you on or slightly above a normal glide slope. The Airman's Information Manual contains a complete description of the VASI system.

f. Landing/Take-off. When landing after the take-off of a large aircraft, make a normal landing near the approach end of the runway and be solidly on the ground before reaching the point where the large aircraft took off. Although vortices from the departing aircraft will not be formed until the point of rotation, remember that the wind can cause the turbulence to move down the runway toward you.

11. AIR TRAFFIC CONTROL PROCEDURES. When the tower controller advises you "CAUTION WAKE TURBULENCE," etc., he is following his procedures and warning you that it may exist because of an aircraft that recently made a take-off or landing. When you receive such an advisory, don't hesitate to request further information if you believe it will assist you in analyzing the situation and determining the course of action you wish to take.

Remember, even though a clearance for take-off or landing has been issued, if you believe it safer to wait, use a different runway, or in some other way alter your intended operation, ask the controller for a revised clearance. Sometimes, air traffic clearances include use of the word "IMMEDIATE." For example, "CLEARED FOR IMMEDIATE TAKE-OFF." In such cases, the word is used for purposes of air traffic separation. The clearance may be refused if you believe another course of action would be better suited to your intended operation. The controller's primary job is to aid in the prevention of collision between aircraft. However, he will assist you in any way he can while accomplishing his job.

D. D. Thomas

D. D. Thomas
Associate Administrator
for Programs